95.7.1 Mod

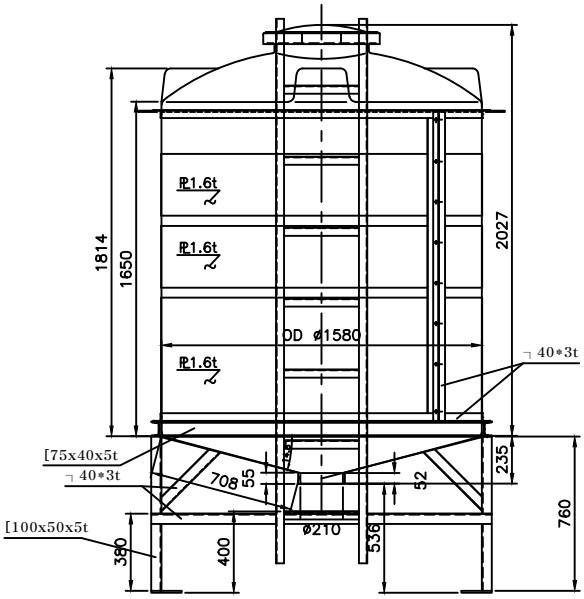

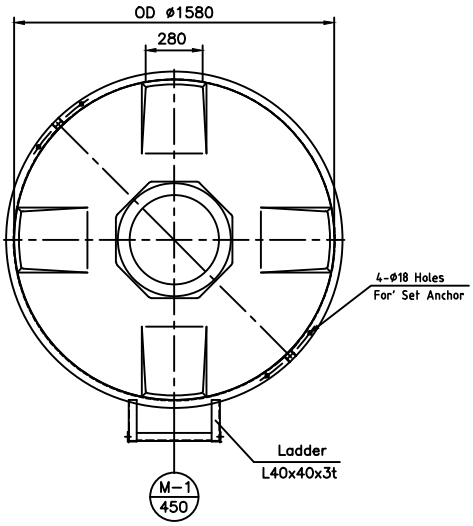

M-1	Manhole	1	ID 450	PE	Screw cap
No.	DESIGNATION	QT'Y	SIZE	MATERIAL	REMARKS

TOLERANCE	DATE:92.10.15			SCALE 1/20
±2%	DESIGN	TITLE PE CHEMICAL TANK (UC-3000Liter)		SHEET
	CHECK			
	APP'D	DWG No. U003-B01/u3n3		SHEETS

???? 에이치피티
H P T Co.,LTD